MARO WORLD

www.maroworldinc.com

HYDRO SERVICES

Phd. Marko Vitaković mech.eng.
CEO / Slovenia Office
Adress: **Dunajska Cesta 106,**
1000 Ljubljana
Republika Slovenija
E-mail: *vitakovic@maroworldinc.com*
Mobil: **+386 69 749064**

Marija Sedlan tex.eng.
CEO / Serbia Office
Adress: **Drage Todorovic 54,**
34113 Kragujevac
Republika Srbija
E-mail: *sedlan@maroworldinc.com*
Mobil: **+381 60 6377551**

INSTALLATION AND MAINTENANCE OF TURBINES

We perform ordinary and complex mechanical installation and maintenance of turbines, having numerous experiences achieved in Europe of Kaplan, Francis and Pelton turbines.
We are, also, able to install, the units' embedded parts (draft tubes, spiral cases, manholes, etc…) and carry out on site machining, turning, non-destructive testing, sandblasting and painting, reprofiling of impellers and distributors, reconstruction of worn components, etc.







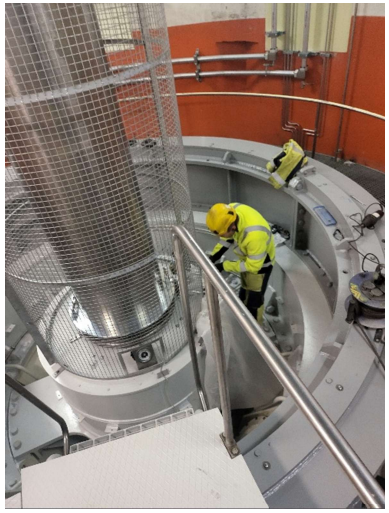



INSTALLATION AND MAINTENANCE OF GENERATORS

We carry out the ordinary maintenance and complete mechanical installation of generators of all sizes, from stators' stacking and winding to assembly and maintenance of rotors, from cryogenic, vegetable fibers or solvents cleaning to the assembly of poles and shaft connections of the excitation system, etc…





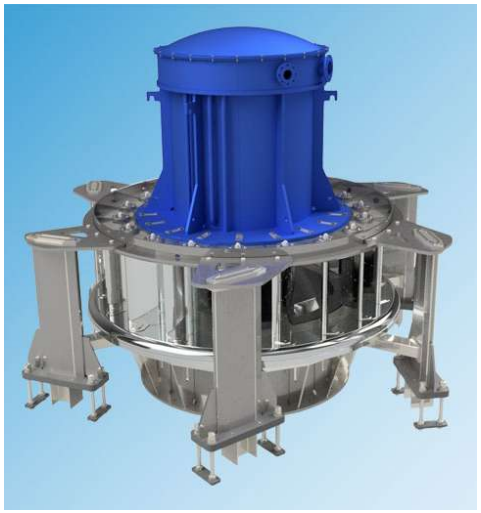

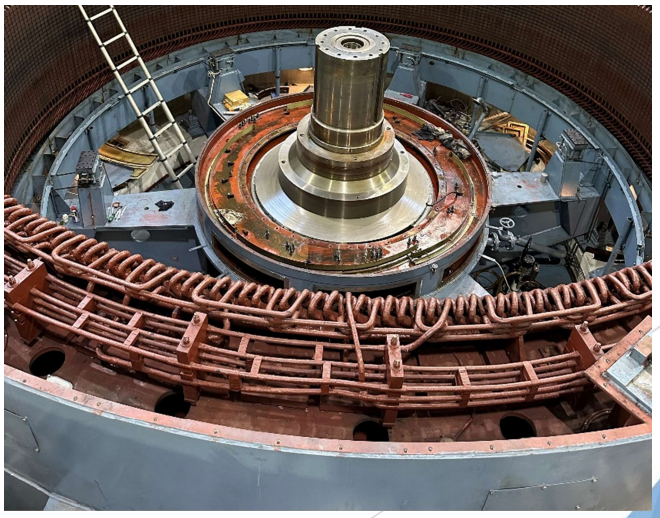

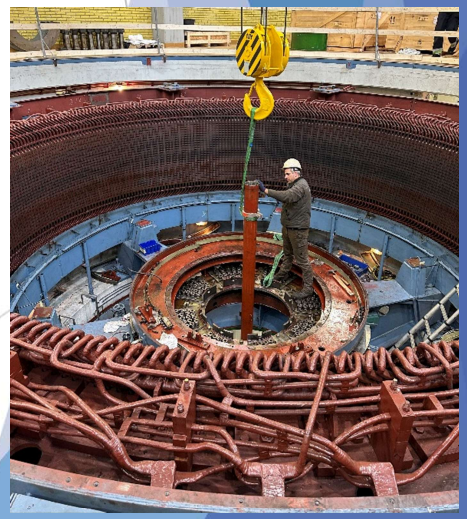

DESIGN OF HYDROMECHANICAL EQUIPMENT

We are experienced in designing equipment for the production of hydroelectric power production (valves, penstocks, gates, various steel structures, hydraulic and cooling systems, etc ...) and we have an integrated technical office able to provide calculation notes, technical specifications, Lay-out, executive drawings, assembly procedures, construction and assembly files, technical sheets for CE marking, list of materials, etc.

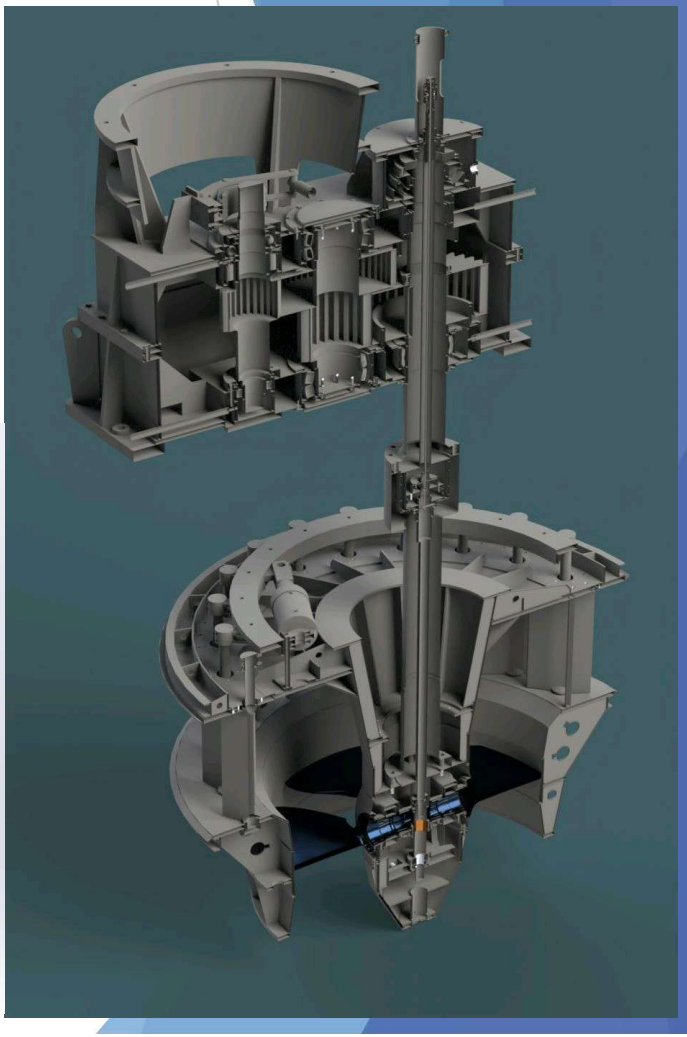

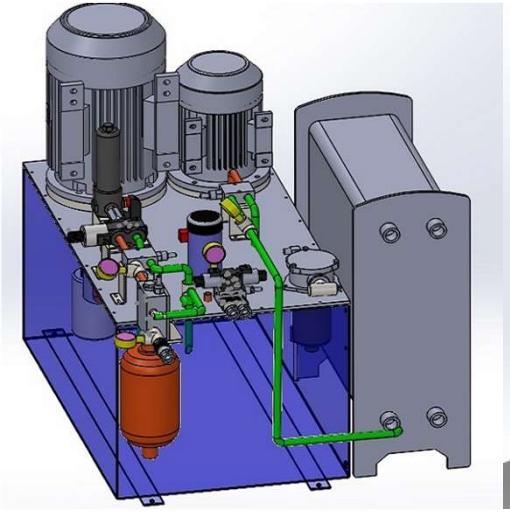

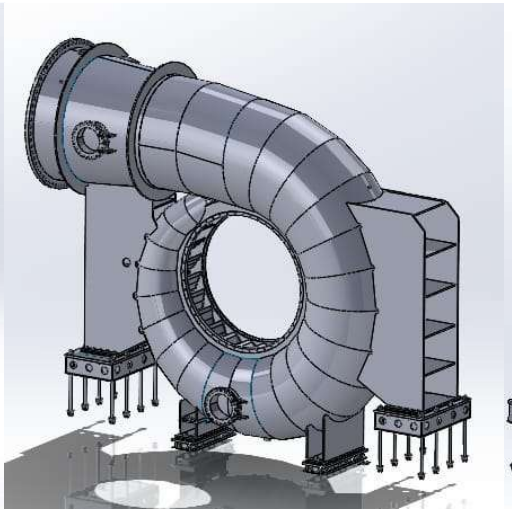

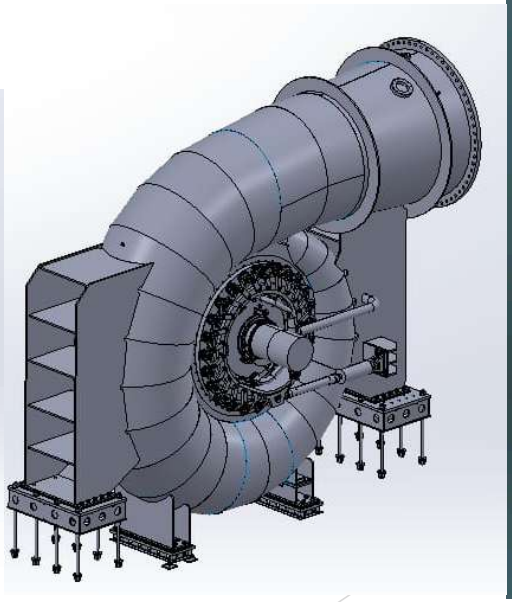

DESIGN, CONSTRUCTION, SUPPLY, ASSEMBLY AND MAINTENANCE OF HYDRAULIC SYSTEMS

We have the skills to manufacture hydraulic power units, servomotors and related piping for valves, turbines and gates.



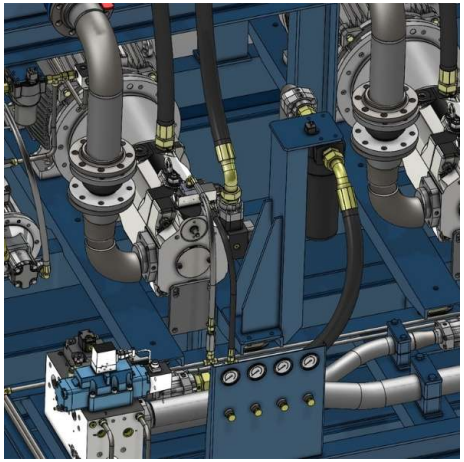

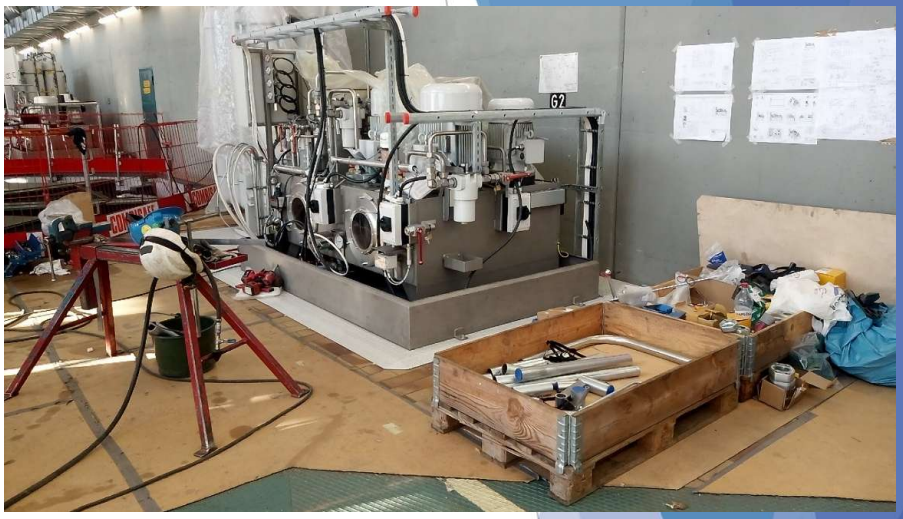



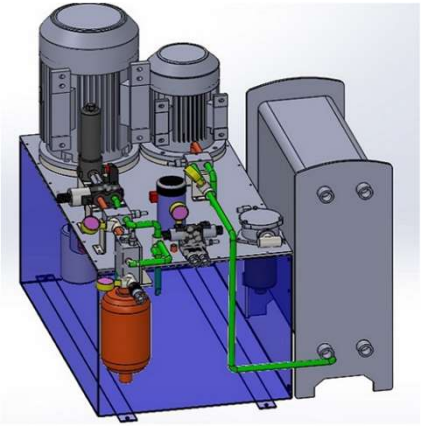

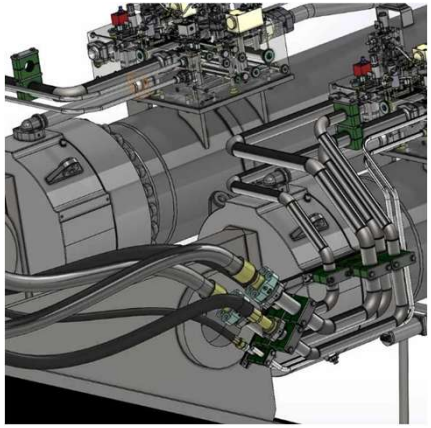



SPECIAL ACTIVITIES ONSITE

In addition to supplies and on-site installations, we integrate our offer with specific activities such as: heat treatments, non-destructive welding checks carried out by our staff (VT, PT and MT), on-site turning and milling, boring and grinding, scaffoldings, sand blasting and painting, coatings with ceramic paints, re-profiling with resins, cavitation repairing, etc.







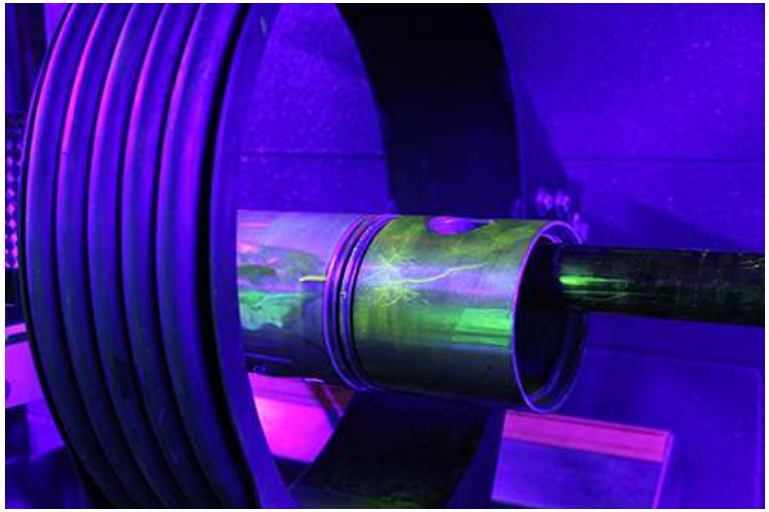



DESIGN, CONSTRUCTION, SUPPLY, ASSEMBLY AND MAINTENANCE OF PIPING AND PENSTOC

We are able to realise:
Penstocks outdoors or inside tunnels, including all accessories: expansion joints, supports, curves, bifurcations and manifolds, manholes, draft tubes, air valves, etc. We perform ordinary and urgent interventions of penstocks repairing and surface treatments on site;
Closed circuit **cooling systems**
Hydraulic pipes with welded or cold formed connections with ogivating machines; Any kind of piping for industrial processes.




